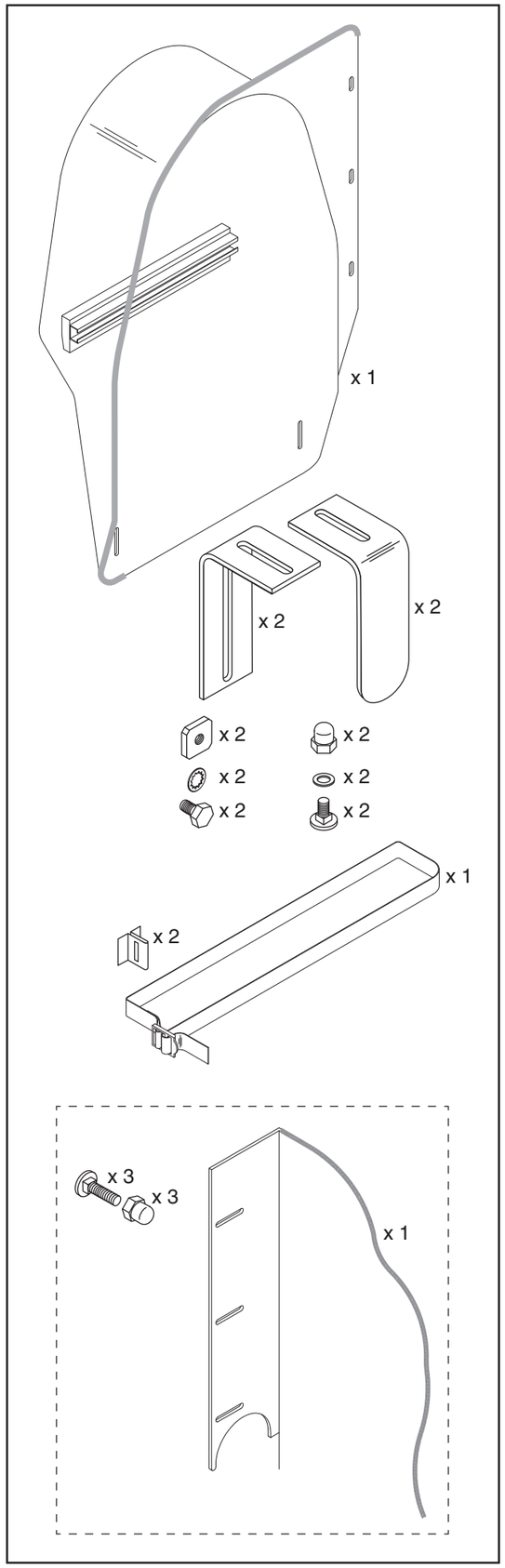

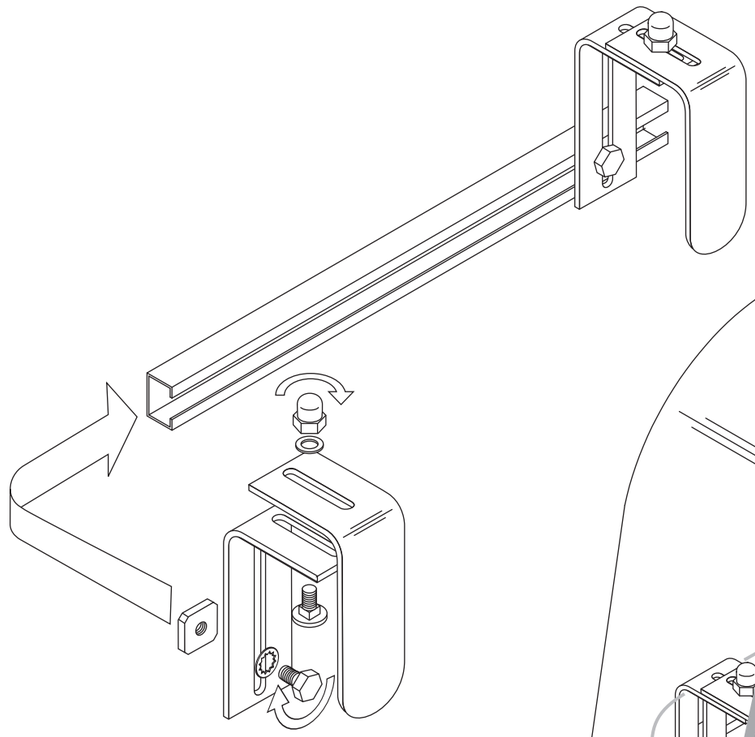

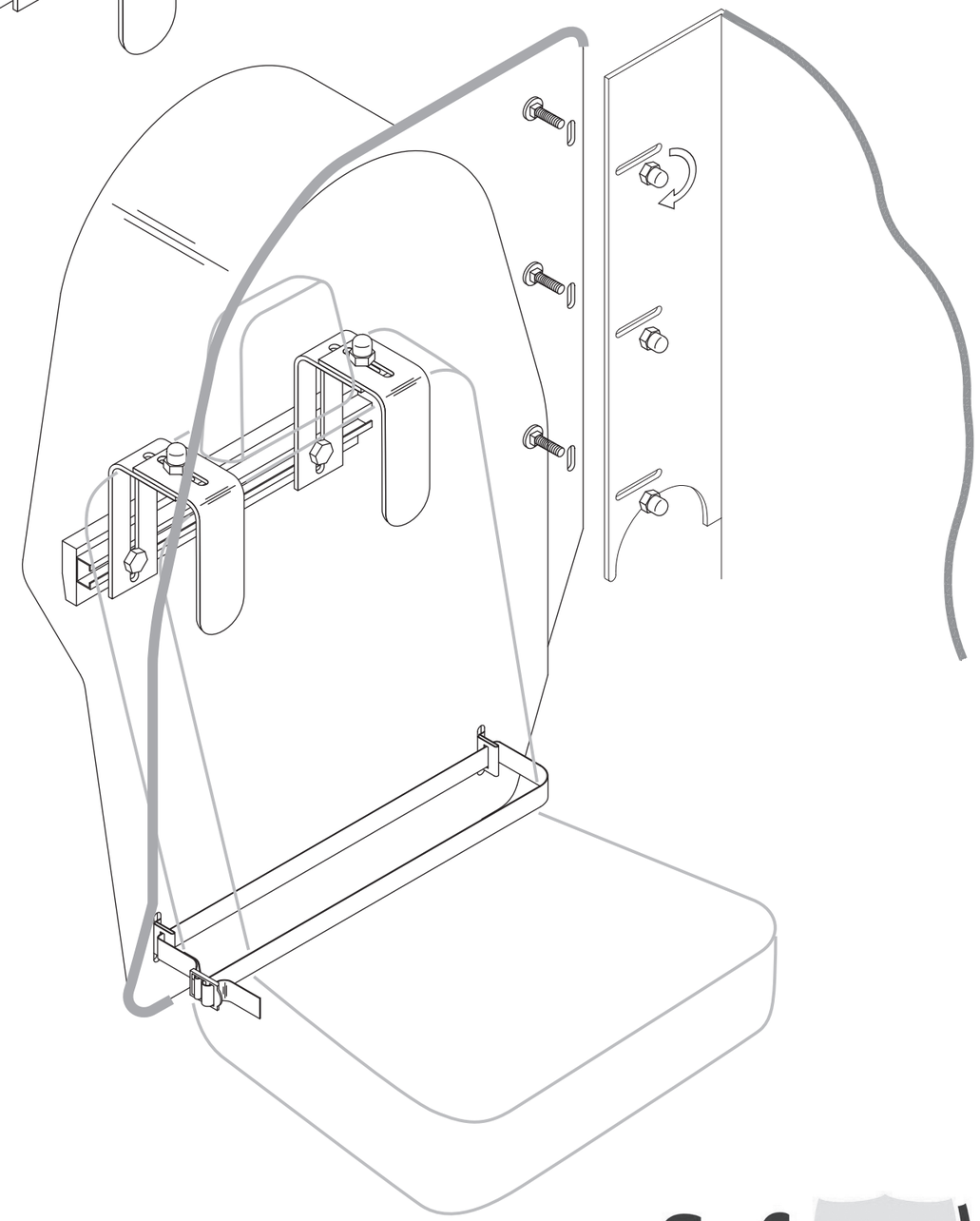

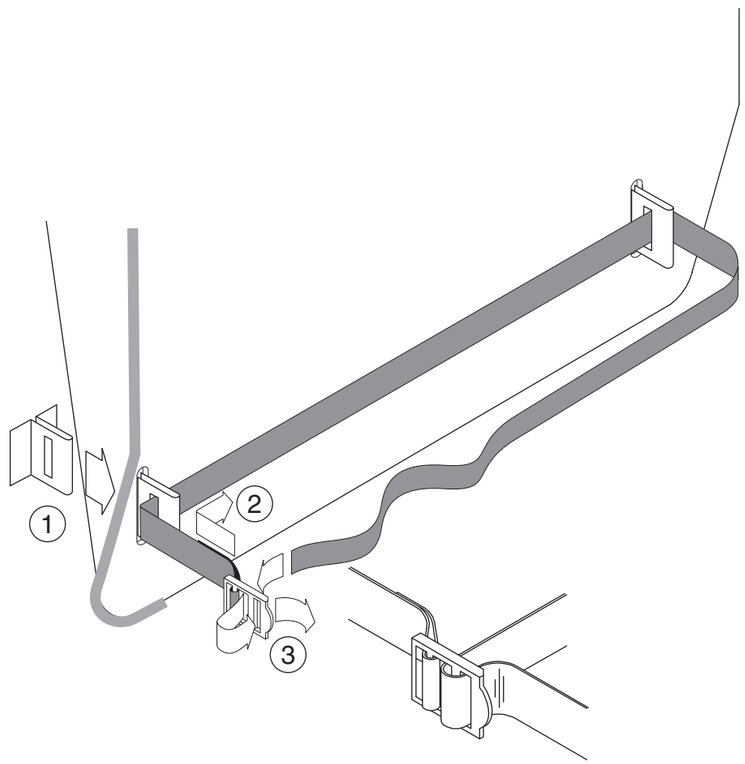

Safe Shield